1 Safety information

- Only use attachments/accessories specified by the manufacturer.
- To avoid accidental ingestion, keep the earbuds away from children and pets.
- The earbuds contain a lithium-ion battery, and may be hazardous if swallowed.
- If ingested, seek immediate medical attention.
- When not in use, store the earbuds in the charging case with the lid closed, and keep out of reach of children and pets.
- Do NOT use the earbuds at a high volume for any extended period.
- To avoid hearing damage, use your earbuds at a comfortable, moderate volume level.
- Turn the volume down on your device before placing the earbuds in/on your ears, then turn the volume up gradually until you reach a comfortable listening level.
- Use caution and follow applicable laws regarding mobile phone and headphone use if using the earbuds for phone calls while driving.
- Some jurisdictions impose specific limitations, such as single earpiece configuration, on the use of such products while driving.
- DON'T use the earbuds for any other purpose while driving.
- Focus on your safety and that of others if you use the earbuds while engaging in any activity requiring your attention, e.g., while riding a bicycle or walking in or near traffic, a construction site or railroad and follow applicable laws regarding headphone use, etc.
- Remove the earbuds or adjust your volume to ensure you can hear surrounding sounds, including alarms and warning signals.
- Do NOT allow children to use the earbuds. Contains small parts which may be a choking hazard.
- Do NOT submerge or expose the earbuds for extended period to water, or wear while participating in water sports, e.g., swimming, water-skiing, surfing, etc.
- To reduce the risk of injury, close supervision is necessary when the charging case is used near children.
- Do not expose charging case to water, rain, liquids or snow.
- Do not use the charging case in excess of its output rating.
- Do not use a charging case that is damaged or modified. Damaged or modified batteries may exhibit unpredictable behaviour resulting in fire, explosion or risk of injury to persons.
- Do not disassemble the charging case. Incorrect reassembly may result in risk of fire or injury to persons.
- Do not open, crush, or expose a charging case to fire, or excessive temperature. Exposure to fire or temperature above 40 °C may cause explosion.
- Have servicing performed by a qualified repair person using only identical replacement parts.
- Do NOT make unauthorized alterations to this product.
- Use this product only with an agency approved power supply which meets local regulatory requirements (e.g., CE).
- Wipe off sweat from the earbuds and the charging case before charging.
- This product contains magnetic material. Consult your physician on whether this might affect your implantable medical device.
- Excessive sound pressure from earphones and headphone can cause hearing loss.
- Attention should be drawn to the environmental aspects of battery disposal.
- Use only with charger base provided with the earbuds.
- Use of apparatus in moderate climates.
- This product shall not be connected to power supply source exceeding PS1. 5V d.c. 15W.
- **WARNING:** The reported noise attenuation will only be achieved when the earbuds are fitted with the supplied Foam Noise Reduction Ear Tips, which must be in good condition and worn correctly as directed.
- **WARNING:** Only charge the earbuds using the charging case supplied with them.
- This product contains non-replaceable batteries.

CAUTION: RISK OF EXPLOSION

» If the battery is subjected to high or low extreme temperatures that a battery can be subjected to during use, storage or transportation.
» If the battery is subjected to low air pressure at high altitude.
» Disposal of a battery into fire or a hot oven, or mechanically crushing or cutting of a battery, that can result in an explosion.
» Leaving a battery in an extremely high temperature surrounding environment that can result in an explosion or the leakage of flammable liquid or gas.
» A battery subjected to extremely low air pressure that may result in an explosion or the leakage of flammable liquid or gas.



- High sound pressure
- Hearing damage risk
- Do not listen at high volume levels for long periods

2 Product Overview

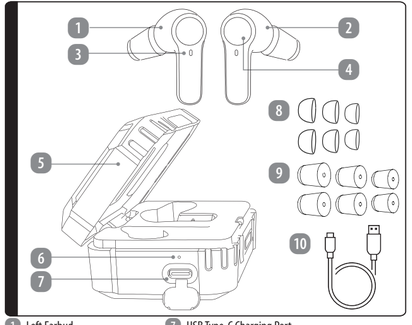

1 Left Earbud
2 Right Earbud
3 Earbud LED Indicator
4 Multifunction Button
5 Charging Case
6 Charging Case LED Indicator
7 USB Type-C Charging Port
8 3 X Pairs of Silicone Ear Tips (S, M, L)
9 3 X Pairs of Foam Noise Reduction Ear Tips (S, M, L)
10 USB Charging Cable
11 User Manual*
12 Warranty Card*

*Not pictured

NOTE

» The one pair of medium-sized Foam Noise Reduction Tips are pre-installed on the earbuds.

3 Charging

3.1 Charging the Charging Case

1. Connect the USB Type-C end of the charging cable to the USB Type-C Charging Port on the charging case.
2. Connect the other end of the charging cable to a suitable USB power source.
3. The Charging Case Indicator displays the charging status as follows:
   - Flashing Red: 0–30%
   - Flashing Yellow: 30–70%
   - Flashing Green: 70–100%
   - Steady Green: Fully charged

3.2 Charging the Earbuds

1. Place both earbuds into the Charging Case.
2. The Earbuds Indicators will illuminate red while charging.
3. The Earbuds Indicators will turn off when the earbuds are fully charged.

WARNING

» Only charge the earbuds using the charging case supplied with them.

4 Power On/Off

Function	Automatic On/Off	Manual On/Off
Power ON	Open the Charging Case and remove the earbuds. The earbuds will automatically turn on.	Press and hold the Multifunction Button for approximately 2 seconds.
Power OFF	Place the earbuds back into the Charging Case. The earbuds will automatically turn off.	Press and hold the Multifunction Button for approximately 5 seconds.

NOTE

» The left and right earbuds must be manually powered on and off separately. Each earbud needs to be operated individually.

5 Pairing

1. Remove both earbuds from the Charging Case. The earbuds will automatically turn on.
2. The Earbud LED Indicator will flash red and blue alternately, indicating that the earbuds are in pairing mode.
3. Enable Bluetooth on your mobile device.
4. Select "**CE260003**" from the list of available Bluetooth devices.
5. A "Connected" voice prompt will sound when pairing is successful.
6. Once previously paired, the earbuds will automatically reconnect to the last connected device when turned on again.

NOTE

» If no Bluetooth connection is established for more than 5 minutes, or if the battery does not have sufficient power, the earbuds will automatically turn off.

6 Fitting the Foam Noise Reduction Ear Tips

Select the appropriate size of Foam Noise Reduction Ear Tips. Attach the tips securely to the earbuds. Insert each earbud into the ear and adjust until the ear tip forms a secure and comfortable seal in the ear canal.

The reported noise attenuation can only be achieved when the Foam Noise Reduction ear tips are correctly fitted and form an effective seal.

WARNING

» The reported attenuation and Class 5 rating apply only when the supplied Foam Noise Reduction Ear Tips are correctly fitted and form an effective seal in the ear canal.
» The Foam Noise Reduction Ear Tips may deteriorate with use. Inspect regularly and discontinue use if the Foam Noise Reduction Ear Tips are damaged or no longer provide an effective seal.
» The small and large size ranges are designed to fit wearers for whom the medium size range is not suitable.

NOTE

» The standard Silicone Ear Tips are not rated for hearing protection and must not be used where hearing protection is required.

ALDI guarantees that our products are developed to our stringent quality specifications. If you are not entirely satisfied with this product, please return it to your nearest ALDI store, within 60 days from the date of purchase, for a full refund or replacement, or take advantage of our after sales support by calling the supplier's Customer Service Hotline.

Bauhn® is a registered trademark of Hands (IP) Holdings Pty Ltd.

Distributed By

ALDI Stores
1 Sargents Road,
Minchinbury NSW 2770
www.aldi.com.au

Made in China

V1.2
03/2027

7 Touch Control Functions





Function	Left Earbuds	Right Earbuds
Play/Pause Music	x1 Single press	x1 Single press
Volume Up	—	x2 Double press
Volume Down	x2 Double press	—
Next Track	—	x3 Triple press
Previous Track	x3 Triple press	—
Answer Call	x1 Single press	x1 Single press
End Call	x1 Single press	x1 Single press





Function	Left Earbuds	Right Earbuds
Reject Call	2s Press and hold for 2 seconds	2s Press and hold for 2 seconds
Activate Voice Assistant	1s Press and hold for 1 second	1s Press and hold for 1 second
Deactivate Voice Assistant	1s Press and hold for 1 second	1s Press and hold for 1 second

8 Storage, Cleaning & Disinfection and Maintenance

Storage:

- Store the product in a cool, dry place away from direct sunlight and excessive heat.
- If the product will not be used for an extended period, recharge the product every 3–6 months to help maintain battery performance.

Cleaning & Disinfection:

- Clean the earbuds regularly using a soft cloth dampened with mild soap and water. Do not immerse the earbuds in water. Allow the earbuds to dry completely before use.

Maintenance:

- Inspect the earbuds and the Foam Noise Reduction Ear Tips regularly for signs of wear, damage or deterioration. Replace worn or damaged components before use. Do not disassemble or modify the product.

9 Technical Specifications

Bluetooth Version:	V 6.0
Bluetooth Range:	Up to 20 meters
Play Time:	Earbuds only - 8 Hours Playtime (at 50% volume) With charging case - 68 Hours Playtime (at 50% volume)
Power Input:	DC 5V, 500mA
Earbuds Battery Capacity:	3.7V, 45mAh, 0.1665Wh
Charging Case Battery Capacity:	3.7V, 1000mAh, 3.7Wh

ATTENUATION DATA ACCORDING TO AS / NZS 1270:2002

Frequency (Hz)	125	250	500	1000	2000	4000	8000
Mean attenuation (dB)	25.2	23.8	23.8	25.9	32.5	32.0	38.1
Standard deviation (dB)	4.1	3.6	3.7	2.6	2.6	2.2	3.7
Mean – SD (dB)	21.0	20.2	20.2	23.2	29.9	29.8	34.4

10 After Sale Support

If you experience any issues with this product or its performance is not what you had expected, please contact us at Balco Brands.

It is likely that we can resolve any problems for you via phone or email.

We can be reached on:

- **Phone:** 1300 663 907 (Mon - Fri; 8:30am - 6:00pm AEST)
- **Email:** customercare@balcobrands.com
- **Web:** www.balcobrands.com

ALDI

BAUHN®

HEARING PROTECTION EARBUDS
Warranty Details

REGISTER YOUR PURCHASE AT www.aldi.com.au/en/about-aldi/product-registration/ TO KEEP UP-TO-DATE WITH IMPORTANT PRODUCT INFORMATION

The product is guaranteed to be free from defects in workmanship and parts for a period of 12 months from the date of purchase. Defects that occur within this warranty period, under normal use and care, will be repaired, replaced or refunded at our discretion. The benefits conferred by this warranty are in addition to all rights and remedies in respect of the product that the consumer has under the Competition and Consumer Act 2010 and similar state and territory laws.

Our goods come with guarantees that cannot be excluded under the Australian Consumer Law. You are entitled to a replacement or refund for a major failure and for compensation for any other reasonably foreseeable loss or damage. You are also entitled to have the goods repaired or replaced if the goods fail to be of acceptable quality and the failure does not amount to a major failure.

AFTER SALES SUPPORT

AU 1300 663 907

customercare@balcobrands.com

MODEL: CE260003 | SELLABLE ID: 773424 | 03/2027

1 YEAR WARRANTY

ALDI

BAUHN®

HEARING PROTECTION EARBUDS
Repair and Refurbished Goods or Parts Notice

Unfortunately, from time to time, faulty products are manufactured which need to be returned to the Supplier for repair.

Please be aware that if your product is capable of retaining user-generated data (such as files stored on a computer hard drive, telephone numbers stored on a mobile telephone, songs stored on a portable media player, games saved on a games console or files stored on a USB memory stick) during the process of repair, some or all of your stored data may be lost.

We recommend you save this data elsewhere prior to sending the product for repair.

You should also be aware that rather than repairing goods, we may replace them with refurbished goods of the same type or use refurbished parts in the repair process.

Please be assured though, refurbished parts or replacements are only used where they meet ALDI's stringent quality specifications.

If at any time you feel your repair is being handled unsatisfactorily, you may escalate your complaint. Please telephone us on 1300 663 907 or write to us at:

Balco Brands Pty Ltd

PO Box 537 Bayswater Business Centre, Victoria, Australia

1300 663 907 - Hours: Mon-Fri 8:30am - 6:00pm AEST

customercare@balcobrands.com

AFTER SALES SUPPORT

AU 1300 663 907

customercare@balcobrands.com

MODEL: CE260003 | SELLABLE ID: 773424 | 03/2027

1 YEAR WARRANTY

USER MANUAL

HEARING PROTECTION EARBUDS

BAUHN®

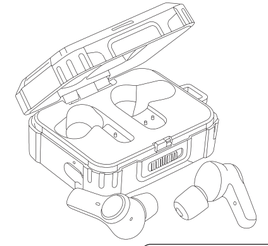

AFTER SALES SUPPORT

AU **1300 663 907**

customercare@balcobrands.com

MODEL: CE260003
Sellable ID: 773424 03/2027

1 YEAR WARRANTY